BULLETIN 434A

INSTALLATION & OPERATION

TrueCap® RF Capacitance Level Sensor Model MK-2

Model MK-2

Thank you for purchasing a quality product manufactured by Monitor Technologies LLC. We realize that you do have a choice of vendors when procuring RF Capacitance sensors and we sincerely appreciate your business!

This manual contains the information necessary to ensure a safe and successful installation. Please read and comply with the section on page 10 of this manual pertaining to SAFETY. Doing so will ensure proper operation of the equipment and the safety of all personnel.

Before discarding shipping container, please inspect it thoroughly and verify that all parts ordered are accounted for. Sometimes smaller parts become stuck under carton flaps and other packaging materials.

In the event that information contained herein does not completely satisfy your requirements or answer your questions, you may contact Technical Support on our website www.monitortech.com, by telephone at 800-766-6486 (630-365-9403), or by fax at 630-365-5646. If your sensor ever requires service either in or out of warranty, please contact us and obtain an RMA number prior to shipping the unit to us.

MONITOR®

PRE-INSTALLATION CONSIDERATIONS

Choosing a Location: (See Figure 2)

1) **Material Flow** - When selecting a location for the MK-2, choose a point in the vessel where the probe will be out of the direct flow of incoming and outgoing material to prevent any mechanical damage that may be caused by the pressure of the flow. The MK-2 must be positioned at a point where incoming material will reach and cover the probe in its normal flow, and when receding, will flow away from the probe in an even manner. For best results, choose a position where a majority of the probe, not just the tip, will be covered. This is particularly important when detecting materials with low relative dielectric constants and low product densities. The unit will not operate as a "tip sensitive" device. For extended length models, allow for at least 8 to 12 inches (203-305 mm) of probe coverage. When sensing highly conductive materials, or those with a high dielectric constant, the MK-2 can perform as a "tip sensitive" sensor.
2) **Vessel Contact** - Select an area where the probe can not contact any internal structure elements of the vessel. When using the Cable Extension Probe, consider the angle of repose of the material that will flow into and out of the vessel. Insure that the expected swing of the cable will not touch the vessel.
3) **Driven Shield Penetration -** Select a location which ensures that the driven shield section protrudes into the vessel and is not recessed in the mounting neck.
4) **Multiple Probe Proximity -** If more than one sensor is mounted in the vessel, do not place the sensors closer than 18 inches (457 mm) from one another.
5) **Pipe Extension Reinforcement -** When top mounting a probe with a pipe extension, select a location where it is feasible to reinforce the extension to the vessel wall. See Mechanical Installation portion of this bulletin for details.
6) **Split Architecture Installation** - When installing a sensor with a remote probe, the restrictions above apply to the remote probe. The remote electronics can be installed either horizontally or vertically. The remote electronics must be located within 12 feet (3.6 m) (wiring distance) of the probe at a location that is free from excessive heat and/or vibration.

Cover Removal: (See Figure 1)

Before loosening the cover, loosen or remove the cover lock screw. Spanner slots are incorporated on the top of the cover which should be used to loosen the cover from the housing. Use a flat bar for initial loosening. DO NOT use a strap or chain type wrench. Keep hands clear of threads on the cover and housing to avoid contact with the thread lubricant.

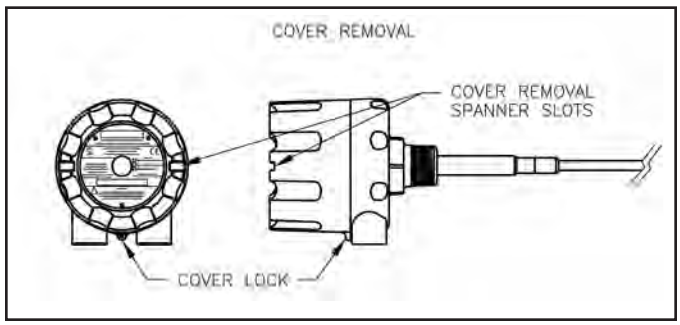

Figure 1

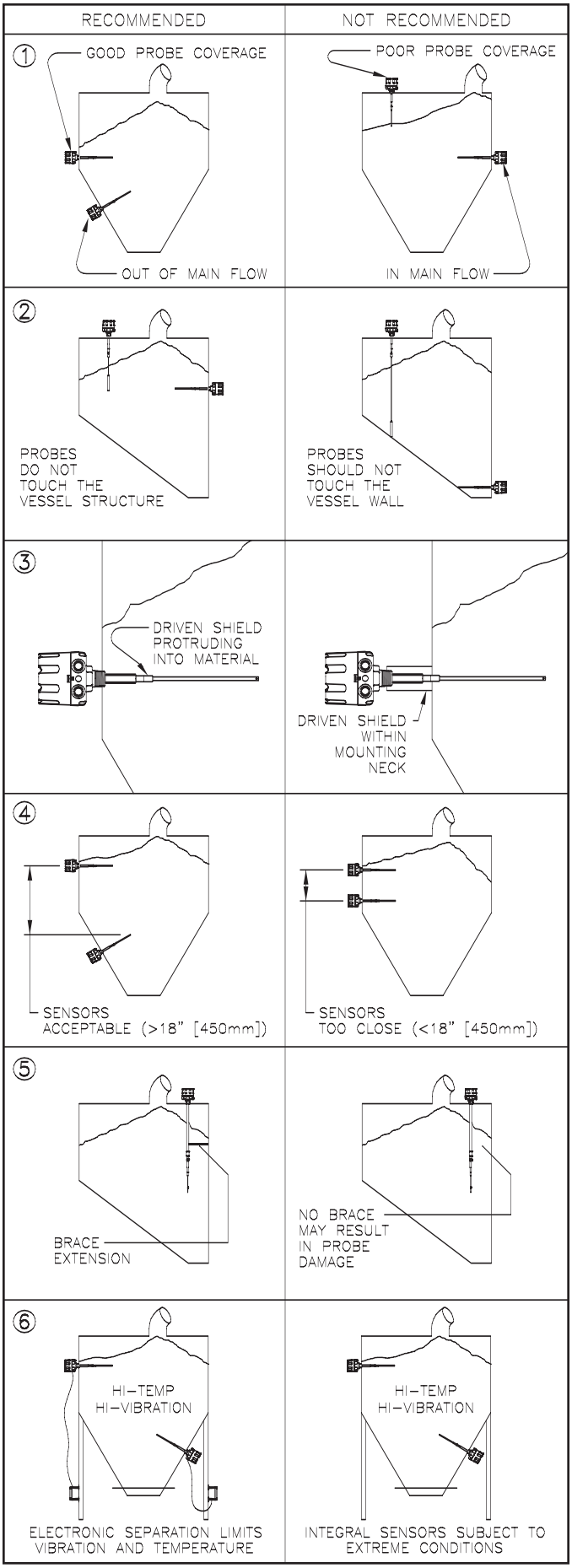

Figure 2

MECHANICAL INSTALLATION

Standard, Food Grade, Stub, Cable Extension and Remote Probe Mounting: (See Figures 3, 4 & 5)

1) Select a mounting location in accordance with the Pre-Installation Recommendations.

2) If using a welded fitting, cut a hole into the side/top of the vessel corresponding to the mounting connection (i.e. 1-1/2" BSPT, 1-1/4" NPT or 3/4" NPT). If using a Monitor mounting plate, cut a 2-1/2 inch (64 mm) center hole and six 11/32 inch (9 mm) mounting holes (for 5/16" bolts) on a 7 inch (178 mm) bolt circle. Use mounting plate as a template.

3) Weld fitting or attach mounting plate to vessel wall.

4) Insert probe through fitting. Do not use sealant tapes (e.g. Teflon tape) or putties. When using the 1-1/2" BSPT or 1-1/4" NPT connection, grease threads with anti-seize then thread unit tightly into place by gripping and rotating housing. When using the 3/4" NPT connection, thread unit tightly into place by gripping and rotating 15/16 inch (24 mm) wrench flats provided on fitting. Continuity between sensor mounting point and vessel wall must be maintained to assure proper probe operation.

DIMENSIONS ARE SHOWN IN INCHES WITH MILLIMETER EQUIVALENT IN BRACKETS

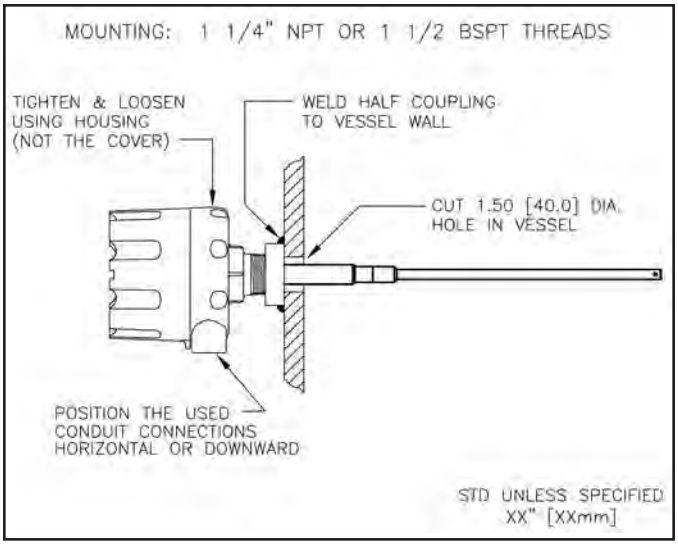

Figure 3

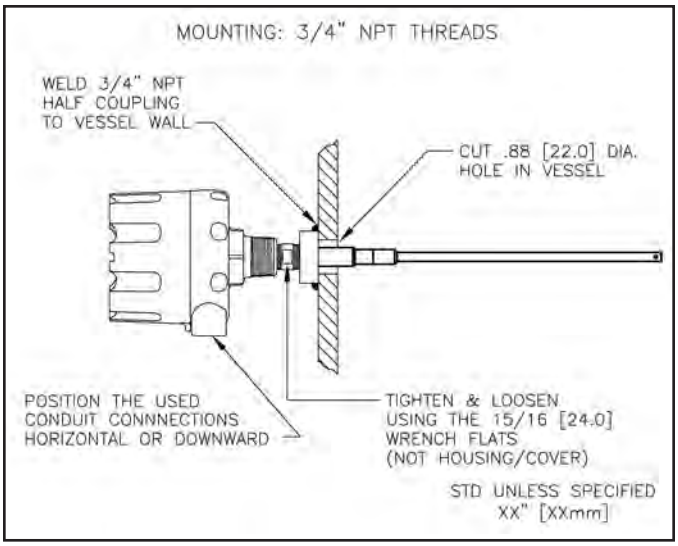

Figure 4

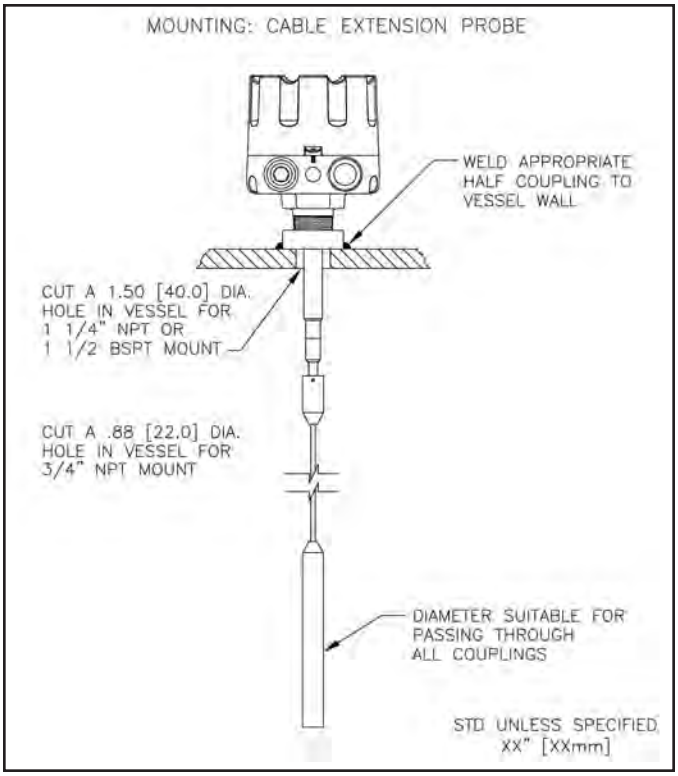

Figure 5

Lagged Housing Version Mounting: (See Figure 6)

1) Select a mounting location in accordance with the Pre-Installation Recommendations.

2) Cut a 7/8 inch (22 mm) hole into the side/top of the vessel corresponding to the 3/4" mounting connection used.

3) Weld fitting to the vessel wall.

4) Insert probe through fitting and thread unit tightly into place by gripping and rotating the 15/16 inch (24 mm) wrench flats provided on fitting closest to mounting point. Do not use sealant tapes (e.g. Teflon tape) or putties. If flats are inaccessible due to tank insulation, thread unit into place by gripping and rotating lagging pipe with a strap/pipe wrench. Continuity between sensor mounting point and vessel wall must be maintained to assure proper probe operation.

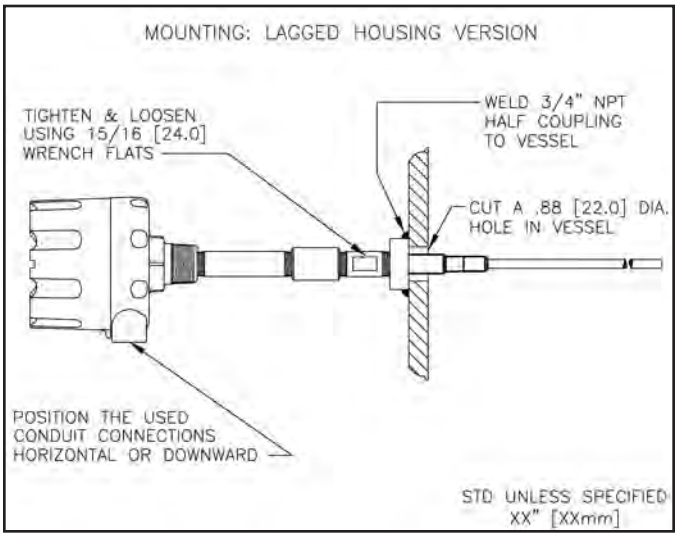

Figure 6

Pipe Extension Probe Mounting: (See Figure 7)

1) Select a mounting location in accordance with the Pre-Installation Recommendations.
2) If using a welded fitting, cut a 1-1/2 inch (40 mm) hole into the top of the vessel corresponding to the 1-1/4" mounting connection used. If using a Monitor mounting plate, cut a 2-1/2 inch (64 mm) center hole and six 11/32 inch (9 mm) mounting holes (for 5/16" bolts) on a 7 inch (178 mm) bolt circle. Use mounting plate as a template.
3) Weld fitting or attach mounting plate to vessel wall.
4) Insert probe through fitting, grease threads with anti-seize, then, thread unit tightly into place by gripping and rotating housing. Do not use sealant tapes (e.g. Teflon tape) or putties. Continuity between sensor mounting point and vessel wall must be maintained to assure proper probe operation.
5) Mechanical reinforcement of the pipe extension should be considered whenever the overall probe length (from mounting point to probe tip) exceeds 60 inches (1.5 m). Mechanical clamping, such as "U" or "C" channel with "U" bolts should be used. DO NOT USE HEAT to connect brace to pipe extensions as wiring inside pipe could be damaged.

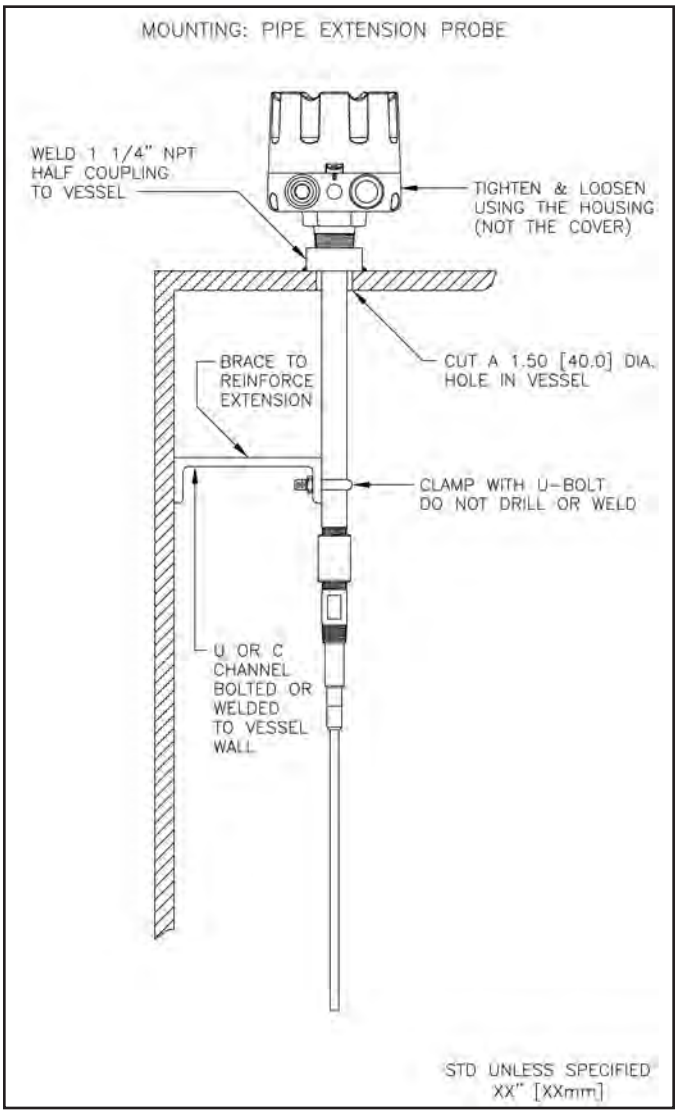

Figure 7

Remote Electronics Mounting

The split architecture configuration is used to protect the electronics from excessive heat or physical vibration.

1) Select a location that is within 12 feet (3.6m) wiring distance of the remote probe but where the extreme temperatures or vibration is not present.
2) The Remote Electronics for Ordinary Locations has no holes cut in the fiberglass box. Drill holes in enclosure insuring circuit separation between the remote probe interconnection and the mains/outputs. Remove electronics (4 backpanel screws) prior to drilling holes.
3) The Remote Electronics for Hazardous Locations has three conduit entrances, one of which is plugged at the factory. This plug may be relocated as desired. All openings must be suitably sealed to insure environmental and hazardous location protections.
4) Drill a hole pattern in the structure to which the Remote Electronics will be mounted (See Mechanicals for details).
5) Secure the enclosure to the structure using 1/4" (6mm) screws.

ELECTRICAL INSTALLATION

Hazardous Location Precautions:

Observe the regulations listed in the National Electrical Code regarding equipment in hazardous locations. In particular, install a conduit seal fitting within 2 inches (50 mm) of the RF Capacitance sensor (for Class I rated products only), ensure power is disconnected whenever the cover is removed, upon completion ensure cover is completed re-attached and terminate IS ground screw to local intrinsically safe ground. Do not substitute any electrical components as this may impair intrinsic safety and thereby compromise safety.

Factory Wiring:

The MK-2 probe wires are connected to the backside of the PCB. DO NOT alter this connection. Doing will likely cause improper operation of the sensor.

Permanently Connected Equipment:

Disconnecting devices shall by included in the system installation. In installations were multiple circuits are used (i.e. independent circuits for power input and output relay), individual disconnects are required. The disconnects shall be within close proximity of the equipment, accessible to operators, and marked appropriately as the disconnect for the associated circuit. Assure the disconnect ratings are appropriately sized for the circuit protected (See Specifications).

Circuit Separation:

Two cable entry locations are provided to aid in maintaining separation of "hazardous live" (typically mains voltages such as 115VAC and 230VAC) and limited circuits (typically control voltages less than 30Vrms or 42.4VDC). However, since the MK-2's single wiring compartment can not absolutely protect against physical contact between multiple circuits, it is required that all wiring used must have an insulation rating of 300V minimum, and a temperature rating of 80˚ C (176˚ F) minimum.

Protective Earthing:

Each MK-2 is provided with a "protective conductor terminal" which shall be terminated to the local earth ground potential to

eliminate shock hazard in the unlikely event of internal insulation breakdown. Select wire size that can carry in excess of the sum of all circuit's maximum amperage.

Power Input:
The MK-2 is designed with a universal power supply that can accept a wide range of AC and DC voltages (see Specifications to insure compatibility). Select wire size that can deliver suitable voltage and current for the application. Connect power as shown in Figure 8. The terminal block can be unplugged from its socket for your convenience. When connecting a DC source, observing polarity is not critical, but it is suggested to follow diagram as a matter of good installation practice.

Output Relay Contacts:
The MK-2 is equipped with two sets of isolated contacts (DPDT) which indicates whether or not material is being detected within the vessel. This output is also influenced by the selection of the "fail-safe" switch as described in the "Calibration" section of this manual. The designations on the circuit board relate to the contact status when the material is "not" sensed and the fail-safe switch is in the "low" mode. These contacts can be connected to any type of control device, provided that ratings are observed (See Specifications). Select wire size that can deliver suitable voltage and current for the application.

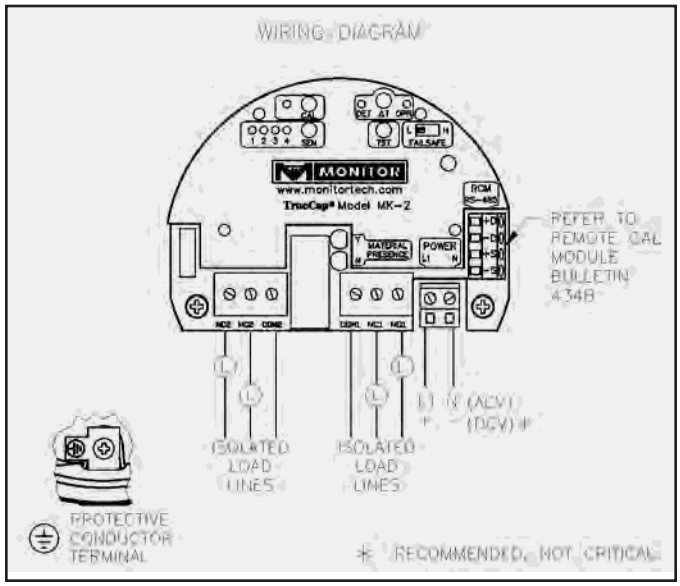

Figure 8

Remote Calibration Module Wiring
A Remote Calibration Module (RCM) can be remotely located and wired to the sensor. The RCM has the capability to setup, test and display various sensor functions from the remote location. Refer to Bulletin #434B for installation and operation details.

Split Architecture Interconnection (See Figure 9)
The interconnection of the remote probe and remote electronics is limited in distance in order to maintain the sensing capability. Separation distances greater then the standard 12 feet (3.6m) or use of an interconnection cable other than Monitor's should not be attempted without the approval of Monitor's Application Engineers.

DIMENSIONS ARE SHOWN IN INCHES WITH MILLIMETER EQUIVALENT IN BRACKETS

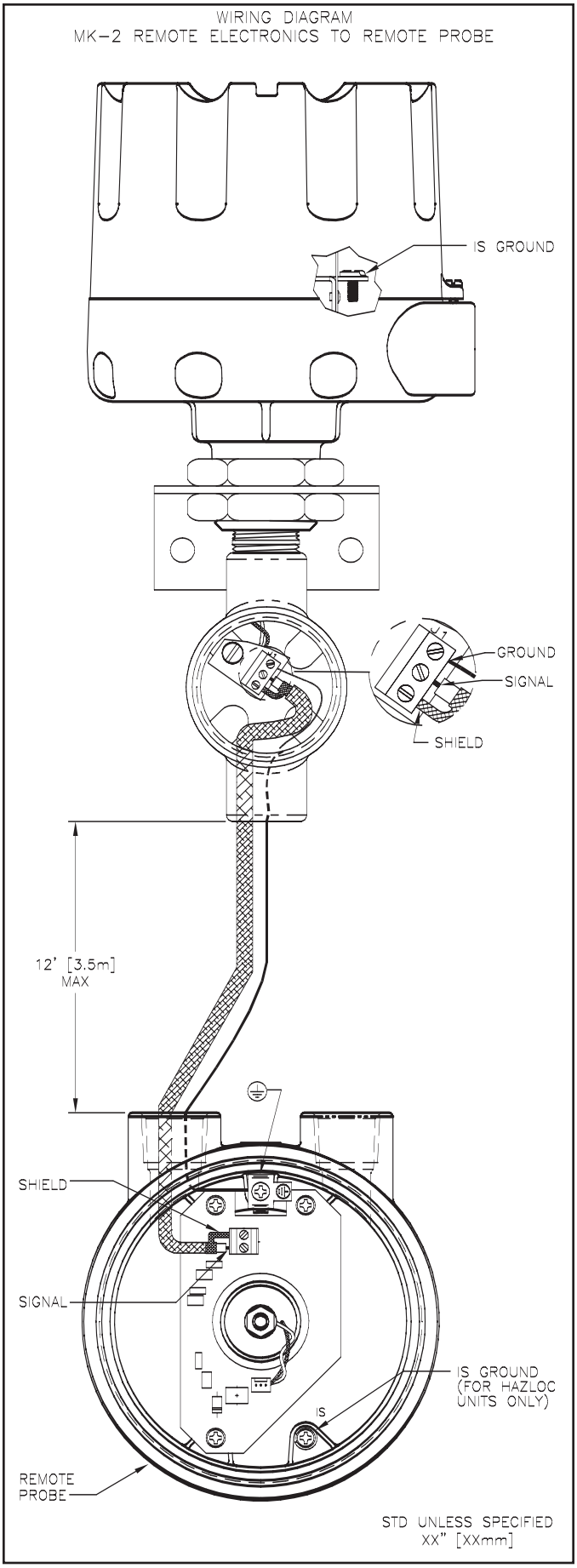

Figure 9

CALIBRATION

Calibration:
The calibration of the MK-2 is accomplished by the push-button designated "CAL" (See Figure 10). This feature allows the unit to ignore any initial capacitance caused by the vessel configuration or material build-up on the probe and driven shield. This procedure can be done at any time after installation in order to accommodate for any changes in the configuration of the probe or vessel, or extreme product build-up.

1) To initiate the calibration feature, ensure that the probe is not submerged in the material.
2) Press and release the "CAL" button. The "CAL" LED will flash for a short period and then remain illuminated when complete denoting proper calibration.

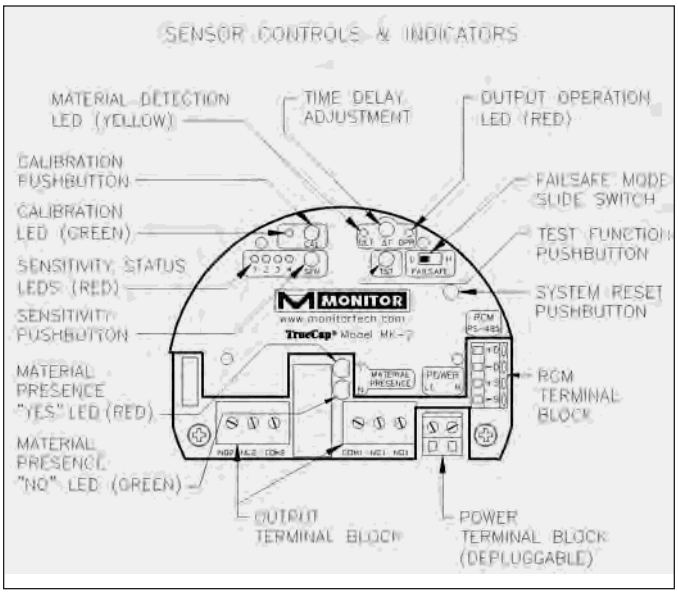

Figure 10

Sensitivity:
The sensitivity of the MK-2 relates to the amount of capacitance (in excess of the calibration value) required to place the unit into a detect mode. Materials with lower dielectric values will require a lower numbered sensitivity setting for maximum sensing capability. Materials with higher dielectric values allow for a higher numbered sensitivity setting, which provides for an additional level of build-up immunity. That is, sensitivity #1 is most sensitive, while sensitivity #4 is least sensitive. The sensitivity of the MK-2 is selected by pressing and releasing the "SEN" push-button which causes the sensitivity level to sequence to the next incremental setting. The current sensitivity setting is indicated by whichever sensitivity LED is illuminated, and correlates to the values shown in Figure 11.

SENSITIVITY SETTING OF THE MK-2

SENSITIVITY SETTING	DETECTION CAPACITANCE	MATERIAL DIELECTRIC	TYPICAL APPLICATIONS
1	0.5pf	1.5 – 2.0	PLASTICS, SOAP, CEMENT
2	2.6pf	2.0 – 4.0	SAND, RUBBER, OILS, COAL
3	8.3pf	4.0 – 7.0	GRAINS, FERTILIZERS, FEED
4	18.0pf	>7.0	WASTEWATER, SLURRIES, ANY WATER BASED SOLUTIONS

Figure 10

Test Function:
The MK-2 features a unique test feature that is initiated by the "TST" push-button. This feature allows users to test the operation and installation of the unit by effectively placing a capacitance value, via the electronics, directly on the probe.

1) To activate the test feature, ensure the unit is calibrated properly, indicated by the illuminated "CAL" LED, and that the probe is not submerged in the material.
2) Press and hold the "TST" push-button. The unit will respond by illuminating the "DET" LED when the sensing circuit of the MK-2 unit is operating correctly. If push-button is held long enough to time through the delay operation, the "OPR" LED and output relay will activate as well. Failure of the "DET" LED to illuminate indicates the MK-2 is out of calibration or that it is not sensing properly. Should this occur, consult the troubleshooting section of this bulletin.
3) Releasing the "TST" push-button will remove the test capacitance from the sensor and place the sensor into normal operating mode.

Delay:
This function provides a time delay from when the unit first enters a detect mode, to when the relay output is activated. It also acts in reverse, delaying the response from when the unit enters a non-detect mode, to when the relay output is deactivated. Clockwise rotation of the single-turn adjustment will increase time delay from .25 to 15 seconds. The unit must enter the new sense state (either material sensed or material not sensed), and remain in that mode for the selected time delay period, before the mode becomes active at the relay output. If the sense state changes before the delay period expires, the timing cycle will start over.

Fail-safe: (See Figure 12)
The term fail-safe refers to the output signal condition which occurs with a loss of power to the probe. A switch permits selection of either low or high fail-safe.

1) **High Fail-Safe -** The relay will de-energize when material is sensed at high level or with power loss.
2) **Low Fail-Safe -** The relay will de-energize when material is below low level or with power loss.

NOTE: The designations on the electronics label refer to the relay contact status when no material is sensed and low fail-safe is selected (Relay is de-energized). The designations are reversed when no material is sensed and high fail-safe is selected (Relay is energized).

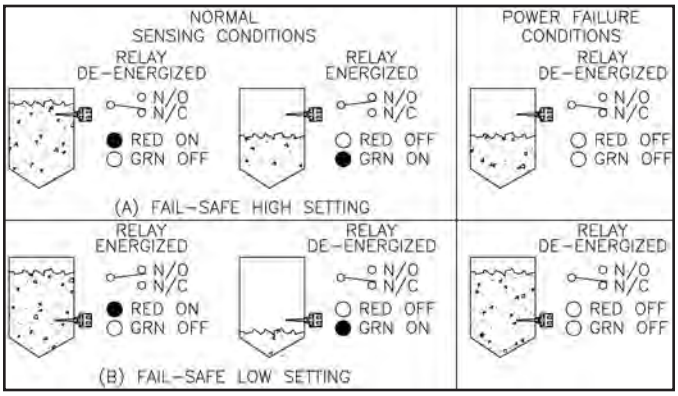

Figure 12

Indicators:

1) **"CAL" green LED -** Its status describes the "calibration" condition of the MK-2. Illumination indicates that the sensor has successfully been calibrated. Flashing indicates that a calibration is in process.
2) **"SEN" Red LED -** Their status describes how "sensitive" the MK-2 will be to the target material. The particular LED illuminated indicates which sensitivity selection has been made.
3) **"DET" yellow LED** - Its status describes the "detection/sensing" condition of the MK-2. Illumination indicates that the amount of capacitance established by the "sensitivity selection" has been detected. Its status is not affected by the time delay setting.
4) **"OPR" Red LED -** Its status describes the "operate/output" condition of the MK-2. Illumination indicates that the relay output is in the "operate/material sensed" condition. Its state is influenced by the time delay setting but not by the fail-safe setting.
5) **Material Presence "Y" Red LED** - Its status matches the indication of the "OPR" Red LED. That is, illumination indicates that the relay output is in the "operate/material sensed" condition. This LED can be viewed externally through the lens in the top of the cover (ordinary location units only). Illumination also indicates that power is present at the MK-2.
6) **Material Presence "N" Green LED** - Its status is opposite the indication of the Material Presence "Y" Red Led and the "OPR" Red LED. That is, illumination indicates that the relay output is in the "non-operate/no material sensed" condition. This LED can be viewed externally through the lens in the top of the cover (ordinary location units only). Illumination also indicates that power is present at the MK-2.

Initialization/Self-Verification Mode:

The microcontroller-based electronics will flash the Material Presence "Y" Red and "N" Green LEDs in either of the following situations:

1) Power-up initialization- Whenever power is first applied, the MK-2 spends roughly two (2) seconds to settle into a normal state. During this time, the LEDs will flash.
2) Self-Verification error- During normal operation, the MK-2 continually checks itself for proper processing. If an abnormal condition is detected, the MK-2 will force the relay into the state related to the "fail-safe" selection and will flash the Material Presence LEDs.

Calibration Procedure:

1) Select the fail-safe setting appropriate for the application.
2) Set the time delay desired, from .25 to 15 seconds.
3) Select sensitivity 1, 2, 3 or 4. Figure 10 provides a guide for initial setup. This may have to be re-selected depending upon the actual application characteristics.
4) Ensure the probe is not submerged in the material.
5) Press and release the "CAL" button. The green "CAL" LED will flash, then remain illuminated, indicating a successful and complete calibration.

TROUBLESHOOTING

PROBLEM: Sensor does not detect material.

CAUSE/SOLUTION:

1) Verify that power is applied to the sensor. One of four "SEN" indicators should always be lit.
2) Verify condition of "CAL" LED when material is not present. If not lit, recalibrate the sensor.
3) Verify continuity between probe mount and vessel wall. If poor continuity exists, connect a ground wire between the housing and vessel wall.
4) Verify sensitivity setting. Move sensitivity selection to a lower numbered setting, therefore making the probe more sensitive to "difficult to sense" materials.
5) Verify probe coverage when sensing is expected. The sensor is not designed to be "tip sensitive". Permit significant probe coverage before expecting material sensing.
6) Verify connection of the electronic module to the probe.
7) Verify circuitry operation by using the TEST function, as described in this manual. If improper operation persists, consult factory.

PROBLEM: Sensor remains in "DET" mode even when material is absent.

CAUSE/SOLUTION:

1) Verify the active probe is not in direct contact with any internal vessel structure. If so, reposition sensor.
2) Verify sensitivity setting. Move sensitivity selection to a higher numbered setting, therefore making the probe less sensitive to "easy to sense" materials. Sensitivity #4 is appropriate for highly conductive materials (i.e. water based products).
3) Examine build-up on probe surface. Clean probe if necessary.
4) Only as last resort, recalibrate sensor. If improper operation persists, consult factory.

PROBLEM: Output contact perform opposite of designations (N/O, N/C).

CAUSE/SOLUTION:

1) Designations on PCB relate to relay status when in "Fail-safe Low" mode and when no material is sensed. If "Fail-safe High" mode is used, the designations are reversed. Swap the wire terminations of N/O and N/C if necessary.

PROBLEM: Sensor does not respond to any switch activation.

CAUSE/SOLUTION:

1) Press and release reset switch located on the right side of the control panel. The switch can be accessed through a small hole in the label and will re-boot internal software. Wait approximately 2 seconds for software to reset. If improper operation persists, consult factory.

MAINTENANCE

Fuse Replacement:
The fuse incorporated into the MK-2 PCB is not intended for operator replacement. If necessary, consult the factory for additional technical assistance or for return of the MK-2.

Preventive Maintenance:
The MK-2 design is virtually maintenance free. In typical applications, once the sensor is properly calibrated, it will operate without any further attention. In abrasive applications, probe condition should be periodically observed. Although the probe's construction is made with high quality engineering plastics, heavy abrasion can wear away the probe's insulators. This can influence the calibration and eventually lead to sensor failure. The electronics are housed in a weatherproof enclosure. In addition the PCBs are conformal coated with a silicone-based material to further prevent electrical influence by condensation. The sensor electronics should periodically be observed for any signs of contamination caused by improper enclosure protection (i.e. insure cover is fully engaged, and that wire entries are properly sealed.)

Cleaning Requirements:
Environmental and hazardous location protection is highly dependent on the proper installation of the cover to the housing. A lubricant is applied to the housing/cover threads to enhance ability to twist-on twist-off cover. Clean and re-lubricate threads if necessary to insure trouble-free operation. Do not physically alter threads in anyway otherwise environmental or hazardous location protection could be compromised.

The driven shield feature of the MK-2 is designed to minimize the need for cleaning the probe portion of the sensor. In applications where material build-up is so excessive that electronics can not adequately compensate, probe cleaning may be necessary. If so, wipe the probe with a clean damp cloth from the housing to the probe tip.

MECHANICALS

DIMENSIONS ARE SHOWN IN INCHES WITH MILLIMETER EQUIVALENT IN BRACKETS

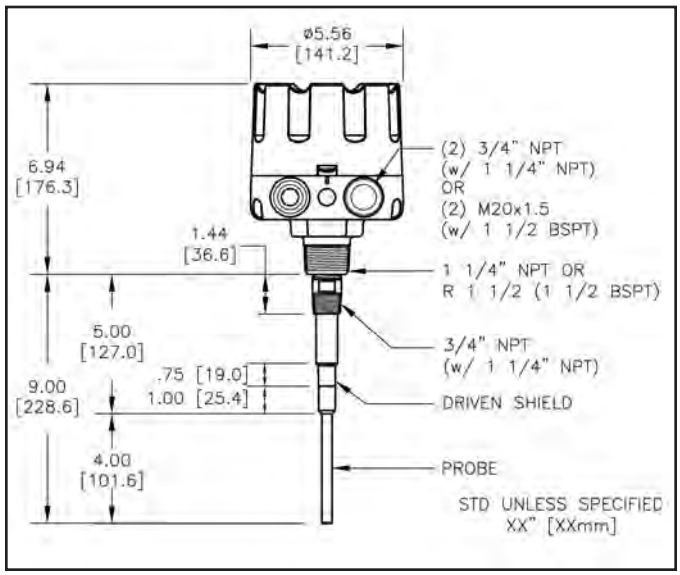

Stub Probe

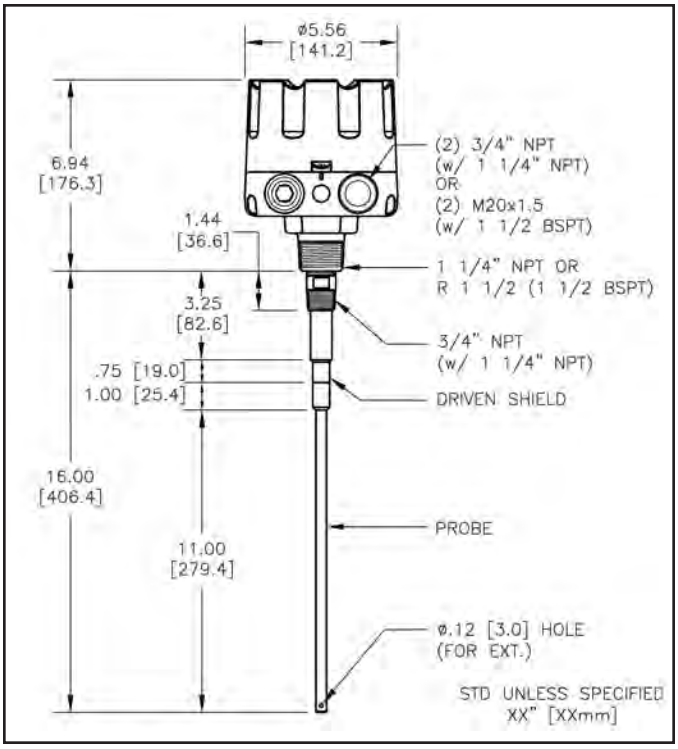

Standard and Food Grade Probe

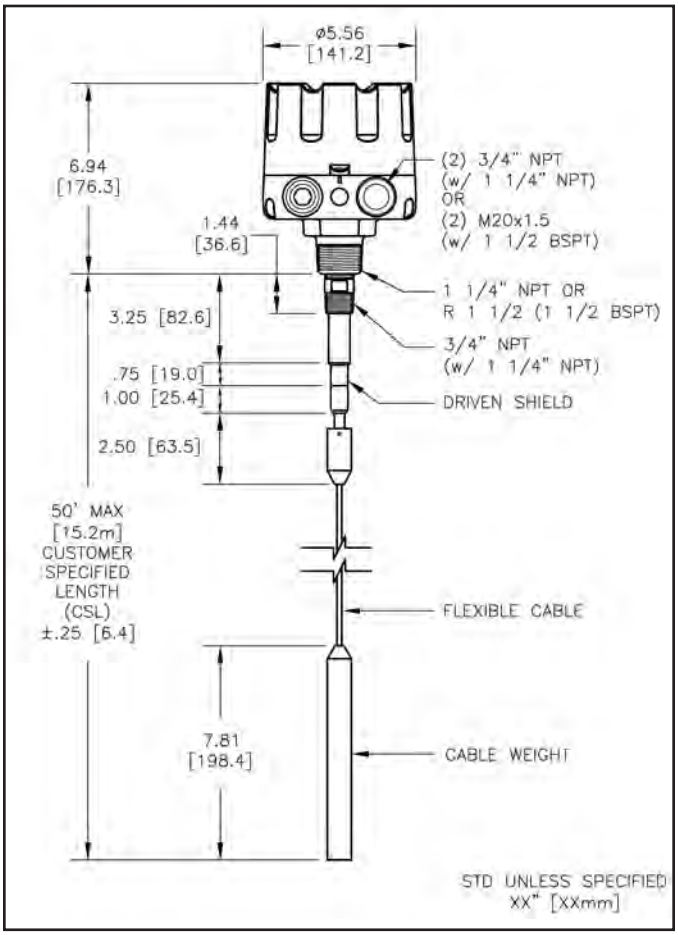

Cable Extension Probe

DIMENSIONS ARE SHOWN IN INCHES WITH MILLIMETER EQUIVALENT IN BRACKETS

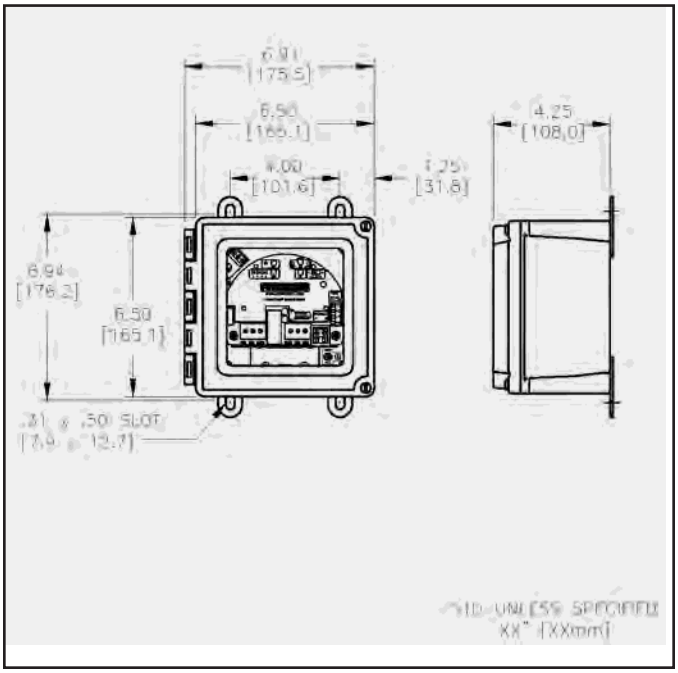

Remote Electronics (Ordinary Location)

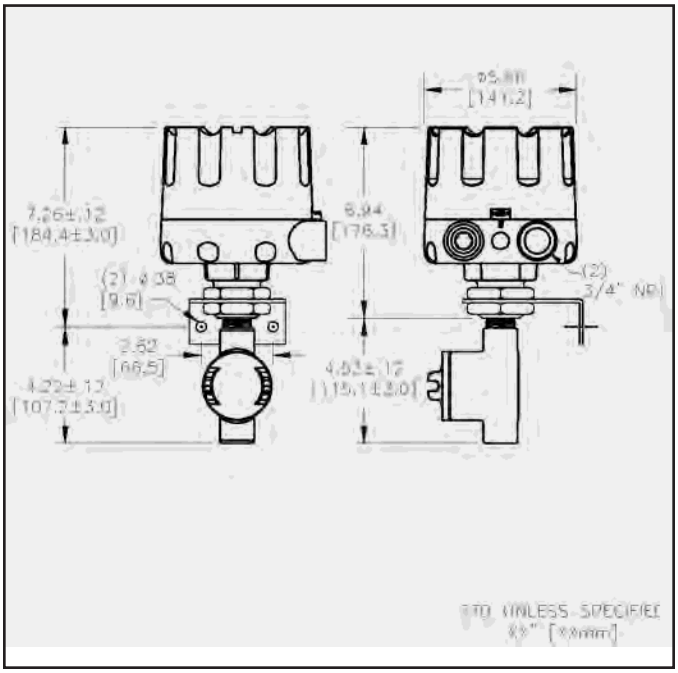

Remote Electronics (Hazardous Location)

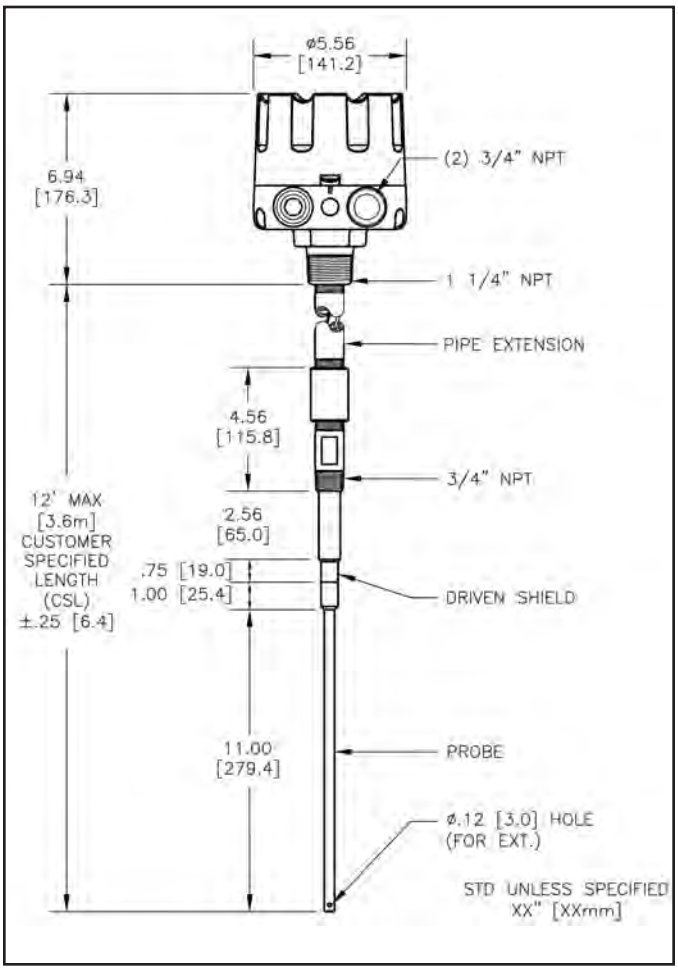

Pipe Extension Probe

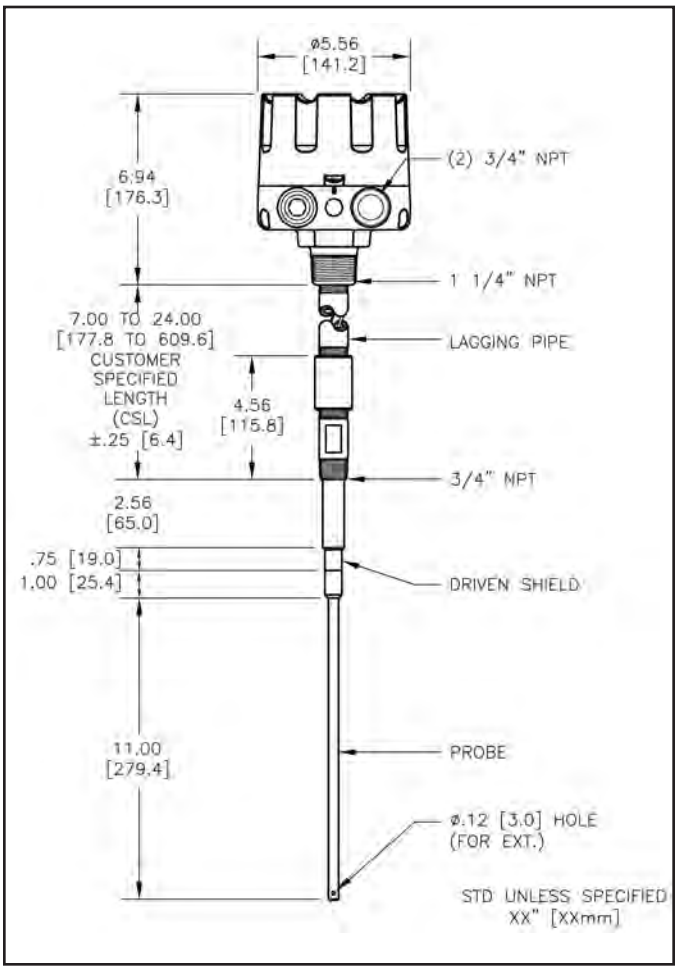

Lagged Housing Version

BULLETIN 434

SAFETY

General Safety

CAUTION: It is essential that all instructions in this manual be followed to ensure proper operation of the equipment and safety of operating personnel. Use of equipment not specified herein, may impair protection provided by equipment. The use of this symbol is used throughout manual to highlight important safety issues. Please pay particular attention to these items.

Electrical Shock Caution

Certain MK-2 models are powered with HIGH VOLTAGE. No operator serviceable parts are inside. All servicing is to be performed by qualified personnel. Each MK-2 is provided with a "protective conductor terminal" which shall be terminated to earth ground potential (See Electrical Installation). This product's design complies with EN61010-1 installation category II and pollution degree 2.

Hazardous Location Caution

Certain MK-2 models can be used in Hazardous Locations (See Specifications). These models shall only be used in applications covered by stated ratings or those considered non-hazardous. Failure to comply could result in damage to personnel and property. The following must be maintained to assume safe operation:

1) Enclosure integrity - The dimensions of the housing, cover or probe shall not be altered.
2) Electrical integrity - Substitution of electrical components may impair intrinsic safety and therefore is prohibited.
3) Maintenance - Power to all circuits must be disconnected before conducting any investigation or maintenance.

Electromagnetic Compatibility (EMC)

The MK-2 was tested and found to comply with the standards listed below. The MK-2 should not be used in residential or commercial environments. Compliance to EMC standards was demonstrated by means of a test setup using the following installation methods.

1) MK-2 enclosure was connected to earth ground (protective earth).
2) No specific wiring convention was used to supply power or to retrieve output signal from the MK-2.

EMC Emissions:

Meets	EN 61326-1	Electrical Equipment for Control Use, EMC
	EN 55011	Radiated and conducted emissions (Class A- industrial)
	EN 61000-3	Fluctuations/Flicker
Meets	FCC Part 15B:	RF Devices, Unintentional Radiators
	CISPR 11	Radiated and conducted emissions (Class A- industrial)

EMC Immunity:

Meets	EN 61326-1	Electrical Equipment for Control Use, EMC
	IEC 1000-4-2	Electrostatic discharge (industrial)
	IEC 1000-4-3	RF radiated EM fields (industrial)
	IEC 1000-4-4	Electrical fast transients (industrial)
	IEC 1000-4-5	Electrical surges (industrial)
	IEC 1000-4-6	RF conducted EM energy (industrial)
	IEC 1000-4-8	Power frequency magnetic fields (industrial)
	IEC 1000-4-11	Source voltage deviation

Ryton® - Trademark of Phillips Chemical Co. Teflon® - Trademark of DuPont Chemical Co.

SPECIFICATIONS

Power:	48-240 VAC ±10%, 50/60Hz; 24-48VDC ±10%, 3W
Altitude:	6562 ft (2000 m) max
Installation Category:	II
Pollution Degree:	4 (reduced to 2 by enclosure) Suitable for indoor/outdoor use
Ambient Op Temp:	-40˚ F (-40˚ C) to +150˚ F (+65˚ C)
***Internal Bin Temp:**	To +176˚ F (+80˚ C) w/alum. mount (<104˚ F (40˚ C) ambient) To +400˚ F (+204˚ C) w/SS mount (<122˚ F (50˚ C) ambient)
Output Relay:	DPDT, 5A @ 250VAC, 30VDC maximum
Indicators:	"DET" yellow LED illuminates when material is sensed "OPR" red LED illuminates to indicate output switching "CAL" green LED illuminates to indicate proper calibration "SEN" bank of four LEDs indicated the sensitivity setting
External Indicators:	Red and green LEDs indicating power and operating mode (Ordinary location units only)
Sensitivity:	Switch selectable 0.5pf, 2.6pf, 8.3pf, 18.0pf
Stability:	±0.01pf per degree F (±0.018pf per degree C) @ 0.5pf setting
Time Delay:	0.25 to 15 sec single-turn adj. for delay to activate & delay to de-activate
Fail-Safe:	Switch selectable - HI/LO
Build-up Immunity:	Protected via driven shield to 150 ohm load
Enclosure:	Cast alum screw-on cover, beige polyester pwdr coat, NEMA 4, IP66
Conduit Connection:	Two (2) 3/4" NPT connections (M20 cable glands provided when 1-1/2" BSPT process connection is specified)
****Approvals:** (Pending)	CSA_{US} CSA_C Ordinary Locations, CE Mark(Ordinary location only) CSA_{US} CSA_C: Class I Groups C,D, Exp. Proof & Intrinsically Safe CSA_{US} CSA_C: Class II Groups E, F & G, Dust Ignition Proof & Intrinsically Safe
Standard/Food Grade Probe	
Mounting:	1-1/4" NPT alum, R 1-1/2 (BSPT 1-1/2), or combo 3/4" NPT 316SS and 1-1/4" NPT alum
Probe Material:	3/8in(9.5mm) dia. 316SS probe & guard, Ryton® & Nylon insulators
Probe Length:	16in(406mm) from alum mounting
Temp (Probe Only):	Ryton® +450˚ F (+232˚ C) max; Nylon +300˚ F (+148˚ C) max
Pressure:	50 psi(3.5 bar) max (alum connection);150 psi(10 bar) max (3/4" NPT SS)
Stub Probe	
Mounting:	1-1/4" NPT alum, R 1-1/2 (BSPT 1-1/2), or combo 3/4" NPT 316SS and 1-1/4" NPT alum
Probe Material:	3/8in(9.5mm) dia. 316SS probe & guard, Ryton® & Nylon insulators
Probe Length:	Cut to customer specification; application dependent
Temp (Probe Only):	Ryton® +450˚ F (+232˚ C) max; Nylon +300˚ F (+148˚ C) max
Pressure:	50 psi(3.5 bar) max (aluminum); 150 psi(10 bar) max (3/4 NPT SS)
Cable Extension Probe	
Mounting:	1-1/4" NPT alum, R 1-1/2 (BSPT 1-1/2), or combo 3/4" NPT 316SS and 1-1/4" NPT alum
Probe Material:	1/8in(3.2mm) diameter 316 SS Teflon® jkt'd cable, Nylon insulator
Cable Length;	Customer specified up to 50 ft (15 m) overall insertion from alum mtg
Temp (Probe Only):	+300˚ F (+148˚ C) max
Pressure:	50 psi(3.5 bar) max (1-1/4 NPT alum); 150 psi(10 bar) max (3/4 NPT SS)
Pipe Extension Probe	
Mounting:	1-1/4" NPT alum
Lag Material:	Galvanized or 316SS
Pipe Ext Length:	Customer specified up to 144in (3.6m) overall insertion
Interface To:	Standard or Food Grade (See applicable specs)
Lagged Housing Version	
Mounting:	3/4" NPT 316SS
Lag Material:	Galvanized or 316SS
Lag Length:	Customer specified from 7 to 24 in (178 to 610 mm)
Interface To:	Standard Probe only (See applicable specs)
Split Architecture	
Elec. Enclosure:	Cast Aluminum, screw-on cover, polyester powder coat (HL) Fiberglass enclosure (OL)
Cable:	12 ft (3.6m), 22 awg co-ax / 18 awg wire
Max Bin Temp:	Ryton® probe: 450˚ F (+232˚ C); Nylon: 300˚ F (+148˚ C)

*Influenced by mounting, material thermal conductivity and ambient temperature.
**Hazardous location approvals on units with Pipe Extension or Lagged Probes with integral electronics/probe are $CSA_{US/C}$ Class II Groups E, F & G (SS version ONLY. Hazardous location approvals are not available on the galvanized version). Hazardous location approvals for Split Architecture remote electronics are Class II, Groups E, F & G. All probe versions, except the galvanized version of the pipe extension or lagged probe unit, are Class I Groups C &D, Class II Groups E, F & G and Intrinsically Safe.

WARRANTY

Monitor Technologies LLC warrants each **TrueCap®** RF capacitance sensor it manufactures to be free from defects in material and workmanship under normal use and service for two (2) years from the date of purchase. The purchaser must notify Monitor of any defects within the warranty period, return the product intact, and prepay transportation charges. The obligation of Monitor Technologies LLC under this warranty is limited to repair or replacement at its factory. This warranty does not apply to any product which is repaired or altered outside of Monitor Technologies' factory, or which has been subject to misuse, negligence, accident, incorrect wiring by others, or improper installation.

Monitor Technologies LLC
44W320 Keslinger Rd. ▼ P.O. Box 8048 ▼ Elburn, IL 60119-8048 ▼ 630-365-9403 ▼ 800-766-6486 ▼ Fax: 630-365-5646 ▼ www.monitortech.com